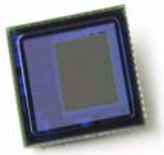

OV3640 3.1-megapixel product brief

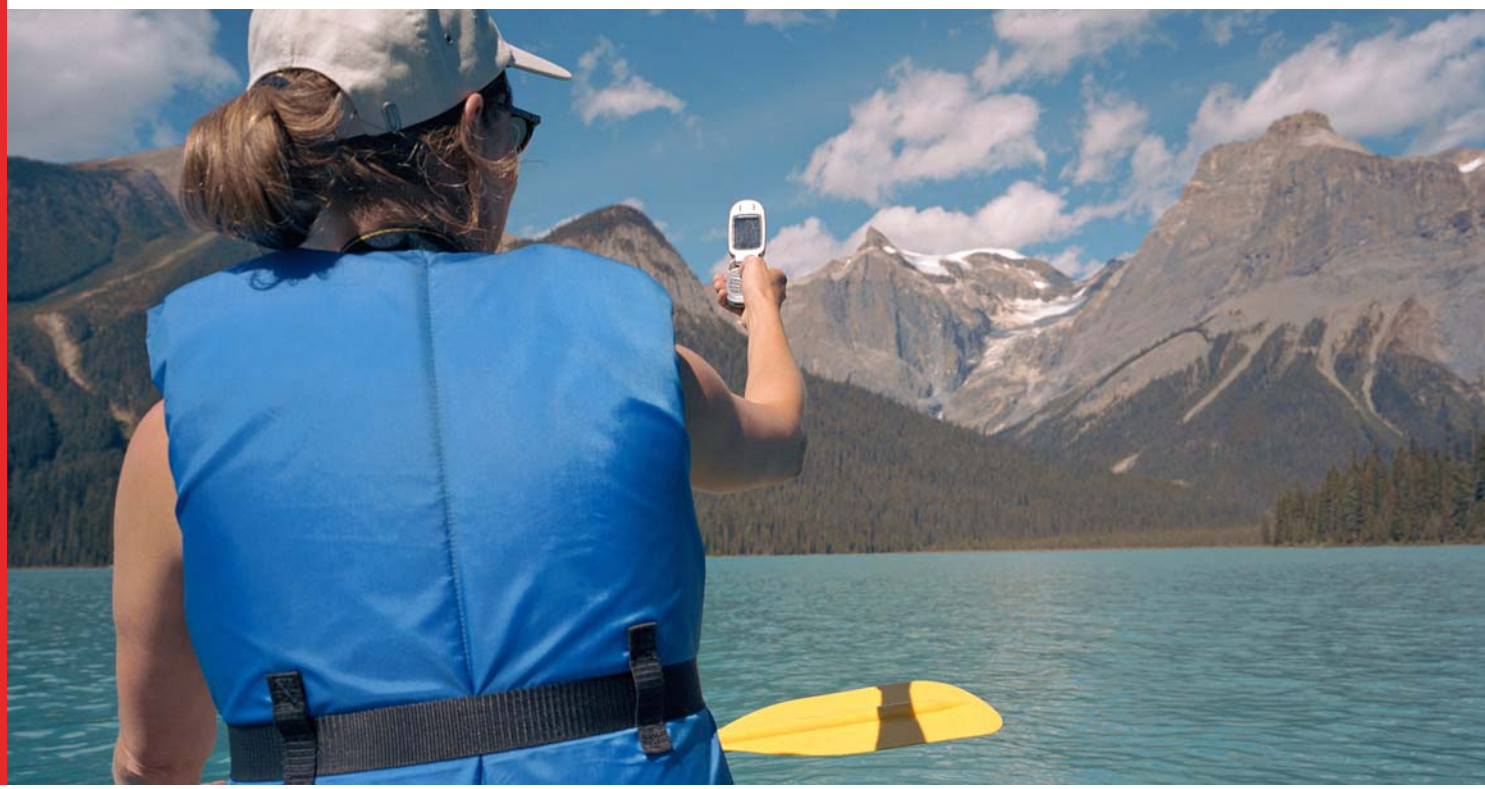

lead free

available in a lead-free package

1/4-inch, High-Performance 3-Megapixel CameraChip™ Sensor with Image Stabilization and MIPI

The OV3640 is a feature-rich, high-performance 3.1-Megapixel CMOS CameraChip™ sensor in a 1/4 inch optical format. It is based on OmniVision's 1.75µm OmniPixel3™ architecture with ultra low stack height (ULSH) for excellent low light sensitivity (500mV/lux-sec) and significantly improved noise and dynamic range (65dB).

The highly integrated OV3640 incorporates an extremely advanced Image Signal Processor (ISP) with features such as an advanced image stabilization/anti-shake (AS) engine that requires no external components. An embedded microcontroller supports the internal auto focus (AF) engine and the programmable general purpose I/O modules enable external auto focus control.

The OV3640's image array operates at up to 15 frames per second (fps) in full 3-megapixel resolution (QXGA) transferred over a two lane MIPI interface or a traditional digital video port (DVP). The sensor also contains an integrated compression engine (JPEG), simplifying bandwidth limited interfaces.

The fully integrated and feature-rich OV3640 is small enough to fit standard 8 x 8 mm fixed focus sockets as well as 8.5 x 8.5mm AF sockets, making it ideal for drop-in upgrades of existing camera modules used in existing lower mega-pixel camera phone designs.

The OV3640's ISP can also be used by an external secondary camera via its DVP while providing continued output through the MIPI interface for the primary camera.

For identification purposes, the OV3640 also includes a one time programmable (OTP) memory. All required image processing functions are programmable through the SCCB interface or the integrated micro-controller.

Find out more at www.ovt.com.

OmniVision®

OV3640

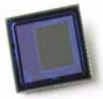

Applications

- Mobile Phones
- Entertainment
- Digital Still Cameras

ordering information

- **OV03640-VL9A**
  (color, lead-free, 56-pin CSP2)
- **OV03640-G00A**
  (color, no chip probing, no backgrinding)

Product Features

- ultra low power and low cost
- automatic image control functions:
  - automatic exposure control (AEC)
  - automatic white balance (AWB)
  - automatic band filter (ABF)
  - automatic 50/60 Hz luminance
  - detection, and automatic black level calibration (ABLC)
- support for output formats: RAW RGB, RGB565/555/444, YUV422/420, YCbCr422 and compression
- image quality controls: color saturation, hue, gamma, sharpness (edge enhancement), lens correction, defective pixel canceling, and noise canceling
- programmable controls for frame rate, AEC/AGC 16-zone size/position/weight control, mirror and flip, scaling, cropping, windowing, and panning
- image quality controls: color saturation, hue, gamma, sharpness (edge enhancement), lens correction, defective pixel canceling, and noise canceling
- support for:
  - video or snapshot operations
  - auto focus control (AFC)
  - horizontal/vertical sub-sampling, data compression output, auto focus control (AFC) and anti-shake
  - internal and external frame synchronization
  - LED and flash strobe mode
  - support for second camera chip-sharing MIPI interface
- support for images sizes: QXGA, and any arbitrary size scaling down from QXGA
- standard serial SCCB interface
- digital video port (DVP) parallel output interface
- MIPI serial output interface
- embedded microcontroller
- embedded one-time programmable (OTP) memory
- integrated anti-shake
- on-chip phase lock loop (PLL)
- programmable I/O drive capability

Product Specifications

- **array size:** 2048 x 1536
- **power supply:**
  core: 1.5VDC ± 5%
  analog: 2.5 - 3.0V
  digital: 1.7V - 3.0V
  (1.8V is strongly recommended)
- **power requirements:**
  active: 75 mA (without MIPI)
  standby: 20 µA
- **temperature range:**
  operating: -20° C to 70° C junction temperature
  stable image: 0° C to 50° C junction temperature
- **output format (8-bit):** YUV(422/420) / YCbCr422, RGB565/555/444, 8-bit compression data, 8-/10-bit raw RGB data
- **lens size:** 1/4"
- **image area:** 3626 µm x 2709 µm
- **input clock frequency:** 6 - 54 MHz
- **dynamic range:** 60 dB @ 8x gain
- **maximum image transfer rate:**
  QXGA (2048 x 1536): 15fps for QXGA and any size scaling down from QXGA
  XGA (1024 x 768): 30fps for XGA and any size scaling down from XGA
- **sensitivity:** 490 mV/lux-sec
- **chief ray angle:** 25° non-linear
- **max S/N ratio:** 36 dB
- **shutter: rolling shutter**
- **scan mode: progressive**
- **maximum exposure interval:** 1560 x tROW
- **gamma correction: programmable**
- **pixel size:** 1.75 µm x 1.75 µm
- **dark current:** <3 mV/sec @ 60°C junction temperature
- **image area:** 3626 µm x 2709 µm
- **package/die dimensions:**
  - CSP2: 6285 µm x 6125 µm
  - COB: 6300 µm x 6140 µm

Functional Block Diagram

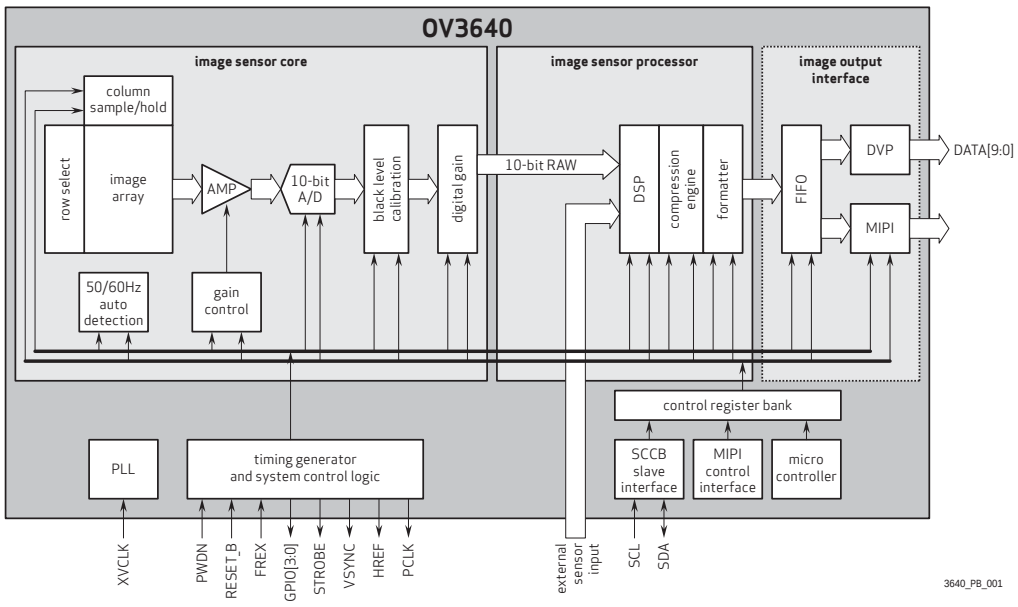

4275 Burton Drive
Santa Clara, CA 95054

tel: +1 408 567 3000
fax: +1 408 567 3001
www.ovt.com

OmniVision reserves the right to make changes to their products or to discontinue any product or service without further notice. OmniVision, the OmniVision logo and Omnipixel are registered trademarks of OmniVision Technologies, Inc. CameraChip, OmniPixel2 and OmniPixel3 are trademarks of OmniVision Technologies, Inc. All other trademarks are the property of their respective owners.

Version 1.2, March, 2011