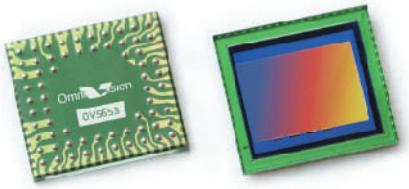

OV5653 5-megapixel product brief

Industry-Leading Still Image Capture and 1080p Full HD Digital Video

lead free

available in a lead-free package

The OV5653 is OmniVision's high-performance 5-megapixel imaging solution for digital still camera (DSC) and digital video (DV) applications, featuring 1.75 µm OmniBSI™ (backside illumination) technology. OmniBSI technology delivers a number of performance improvements over front-side illumination (FSI) technology, including increased sensitivity per unit area, improved quantum efficiency, reduced crosstalk and photo response non-uniformity, all of which lead to significant improvements in image quality.

The OV5653 delivers the industry's best low-light sensitivity at 1300 mV/lux-sec – a 40 percent improvement over previous FSI devices – and a 2x improvement in signal-to-noise ratio (<60 lux). Ideal for both 5-megapixel DSC and DV applications, the OV5653 delivers 720p video at 60 frames per second (fps) and full HD 1080p video at 30 fps, resulting in vivid still and video images, even in the most challenging lighting conditions.

Although the OV5653 is a RAW sensor, it includes a variety of automatic image control functions such as automatic exposure control, automatic 50/60 Hz luminance detection, and auto black level calibration.

The OV5653 also includes programmable user controls for image quality, formatting and output data transfer, mirror and flip, cropping, windowing and panning. The sensor's 256 bytes of embedded one-time programmable memory provide storage for custom information such as calibration parameters.

The OV5653 offers support for horizontal and vertical sub-sampling, and 2x2 binning. The embedded 1.5 volt regulator eliminates the need for additional power components.

The OV5653 – an ideal 5-megapixel solution for DSC and DV applications. Find out more at www.ovt.com.

OmniVision

OV5653

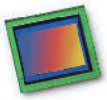

Applications

- Digital Still and Video Cameras

Product Features

- 1.75 µm x 1.75 µm pixel with OmniBSI technology for high performance (high sensitivity, low crosstalk, low noise)
- automatic image control functions:
  - automatic exposure control (AEC)
  - automatic white balance (AWB)
  - automatic band filter (ABF)
  - automatic 50/60 Hz luminance detection
  - automatic black level calibration (ABLC)
- programmable controls for frame rate, AEC/AGC 16-zone size/position/ weight control, mirror and flip, cropping, windowing, and panning
- image quality controls: lens correction, 2-D defective pixel canceling
- support for output formats: 8/10-bit raw RGB data
- support for video or snapshot operations
- support for LED and flash strobe mode
- support for internal and external frame synchronization for frame exposure mode
- support for horizontal and vertical sub-sampling and 2x2 binning
- standard serial SCCB interface
- digital video port (DVP) parallel output interface
- MIPI interface (two lanes)
- 256 bytes of embedded one-time programmable (OTP) memory
- on-chip phase lock loop (PLL)
- embedded 1.5V regulator for core power
- programmable I/O drive capability, I/O tri-state configurability
- support for black sun cancellation
- suitable for module size of 8.5 x 8.5 x 6 mm

Ordering Information

- **OV05653-A66A**
  (color, lead-free, 66-pin CSP3)

Product Specifications

- **active array size:** 2592 x 1944
- **power supply:**
  - **core:** 1.5V ±5% (with embedded 1.5V regulator)
  - **analog:** 2.6 - 3.0V (2.8V typical)
  - **I/O:** 1.8V/2.8V
- **power requirements:**
  - **active:** 150 mA
  - **standby:** 40 µA
- **temperature range:**
  - **operating:** -30°C to 85°C junction temperature
  - **stable image:** 0°C to 65°C junction temperature
- **output formats:** 8/10-bit RAW RGB output
- **lens size:** 1/3.2"
- **lens chief ray angle:** 11.2° non-linear
- **input clock frequency:** 6 - 27 MHz
- **max S/N ratio:** 37 dB
- **dynamic range:** 69 dB @ 8x gain
- **maximum image transfer rate:**
  - **QSXGA (2592x1944):** 15 fps
  - **1080p:** 30 fps
  - **720p:** 60 fps
  - **VGA (640x480):** 90 fps
  - **QVGA (320x240):** 120 fps
- **sensitivity:** 1300 mV/lux-sec
- **shutter:** rolling shutter
- **maximum exposure interval:** 1968 x t_{ROW}
- **pixel size:** 1.75 µm x 1.75 µm
- **dark current:** 8 mV/sec @ 50°C junction temperature
- **image area:** 4592 µm x 3423 µm
- **package dimensions:** 6505 µm x 6005 µm

Functional Block Diagram

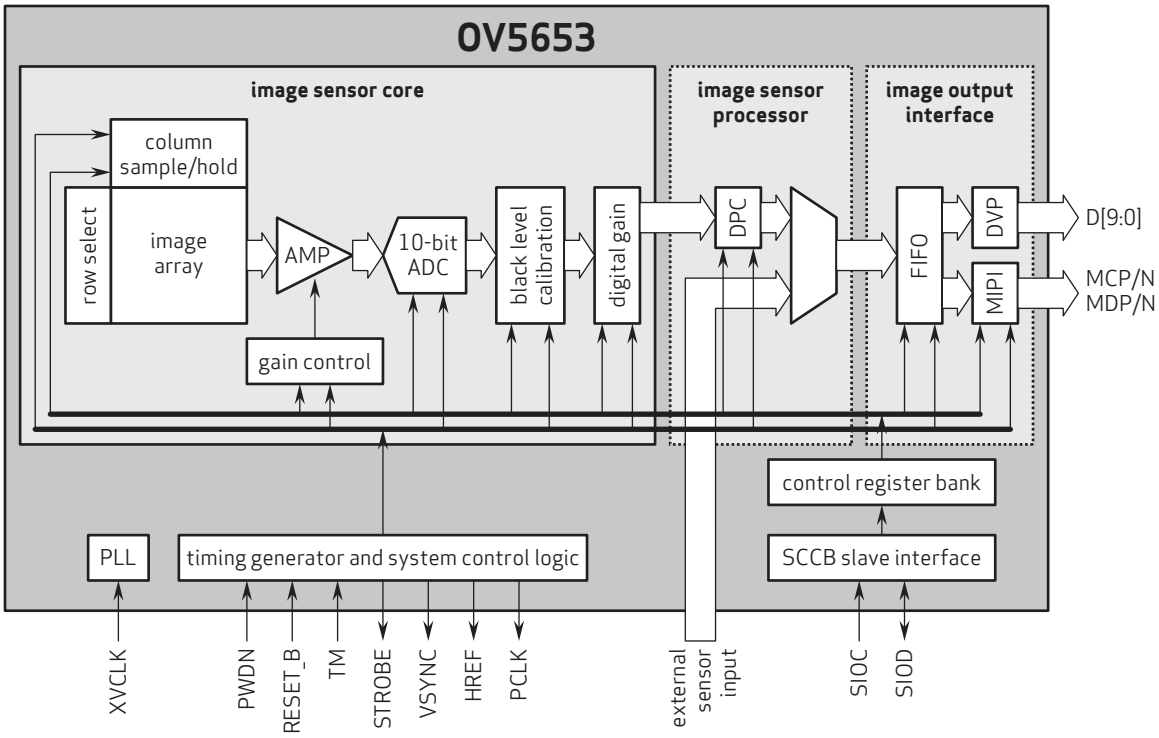

4275 Burton Drive
Santa Clara, CA 95054
USA

Tel: + 1 408 567 3000
Fax: + 1 408 567 3001
www.ovt.com

OmniVision reserves the right to make changes to their products or to discontinue any product or service without further notice. OmniVision and the OmniVision logo are registered trademarks of OmniVision Technologies, Inc. OmniBSI is a trademark of OmniVision Technologies, Inc. All other trademarks are the property of their respective owners.

Version 1.3, October, 2011