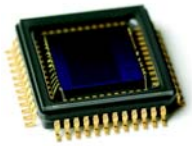

OV7950 NTSC product brief

lead free

available in a lead-free package

Ultra-Compact, High-Performance Automotive Image Sensor

The OV7950 is a highly integrated CMOS video camera that packs a high level of functionality. It is the new generation of advanced CMOS image sensors developed specifically for automotive applications, performing exceptionally well in low light conditions (<0.01 lux) and in a wide temperature range from -40° to +105°C.

At only 1/4-inch square and using only one 3.3 volt DC power supply, the OV7950 color sensor is ideal for applications requiring a small footprint, low power consumption, high-performance video camera. The OV7950 supports NTSC composite video output and can directly interface with an in-car LCD screen or other device with 75 Ohm loading.

Key features of the OV7950 include a new windowing feature which allows customers to adjust their camera setup by moving the sensitive area of the camera in either vertical or horizontal directions. This feature is especially useful in fine tuning the viewing window and angle of fixed position cameras, for example cameras mounted in places where there is a chance of obstructed view such as car bumpers.

The OV7950 image sensor is particularly well suited to automotive applications because it features a dual static overlay function allowing for both a dynamic and a static visual aid layer (text or graphics) within the image. This is especially useful for reference frames and guiding systems in backup and parking assist cameras for cars and trucks.

The OV7950 has completed all required AEC-Q100 Grade 2 qualifications.

Find out more at www.ovt.com/automotive

OmniVision

OV7950

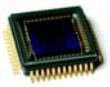

applications

- occupant sensor
- adaptive cruise control
- rear view/backup camera
- lane departure warning
- blind spot detection
- night vision

ordering information

- **OV07950-F48V**
  (color, NTSC, QFP2-48)
- **OV07451-F48V**
  (b&w with microlens, NTSC, QFP2-48)

product features

- OmniPixel2™ technology
- single chip 1/4" format video camera
- single 3.3V power supply
- composite video (NTSC) output
- high sensitivity
- automatic exposure/gain with 16 zone control
- horizontal and vertical windowing capability
- auto white balance control
- aperture/gamma correction
- 50/60 Hz flicker cancellation
- external frame sync capability (Genlock)
- SPI/EEPROM used to control overlay and set other customer variables
- dual static overlay control
- master/slave compatible serial camera control bus (SCCB) control interface for register programming
- low power consumption
- extremely low dark current for high temperature applications
- defective pixel correction
- AEC-Q100 Grade 2 qualified

product specifications

- **array size:** 656 x 492
- **power supply:**
  - analog/ADC/IO: 3.3VDC ± 5%
  - digital core: 1.8 VDC ± 5%
- **power consumption:**
  - operating: 180 mW (typical)
  - power down: 10 µA (typical)
- **temperature range:**
  operating: -40° to +105°C
- **exposure time range:**
  - OV7950: 1/60s - 20µs
  - OV7451: 1/30s - 20µs
- **output format:**
  composite video (NTSC)
- **optical format:** 1/4"
- **sensitivity:** 3.0 V/(Lux-sec) @ 5600K
- **S/N ratio:** 48 dB
- **dynamic range:** 60 dB
- **pixel size:** 6.0 µm x 6.0 µm
- **dark current:** 10 mV/s @ 60°C
- **fixed pattern noise:**
  0.22% of Vpeak-to-peak
- **image area:** 4.080 mm x 3.102 mm
- **package dimensions:**
  12.00 mm x 12.00 mm

functional block diagram

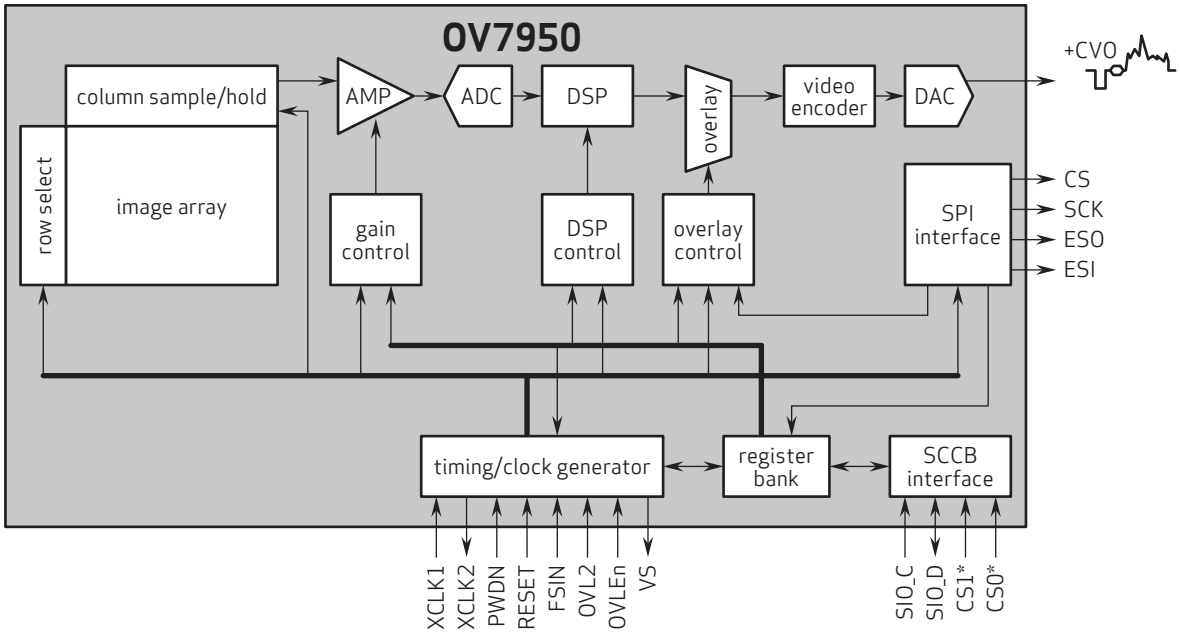

OV7950_PB_001

4275 Burton Drive
Santa Clara, CA 95054

tel: +1 408 567 3000
fax: +1 408 567 3001
www.ovt.com

OmniVision reserves the right to make changes to their products or to discontinue any product or service without further notice. OmniVision and OmniPixel are registered trademarks of OmniVision Technologies, Inc. The OmniVision logo, CameraChip and OmniPixel2 are trademarks of OmniVision Technologies, Inc. All other trademarks are the property of their respective owners.

Version 1.8, June 2012