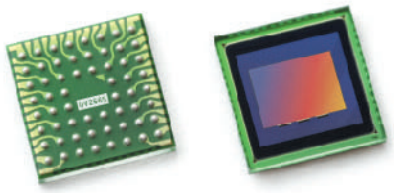

OV2665 2 megapixel product brief

lead free

available in a lead-free package

DSC-Quality Imaging in a 2 Megapixel Sensor

The 1/5" 2 megapixel OV2665 system on chip (SoC) featuring 1.75 µm OmniBSI™ (backside illumination) technology, delivers a number of performance improvements over competing front-side illumination (FSI) sensors, including increased sensitivity per unit area, improved quantum efficiency, reduced crosstalk, and photo response non-uniformity, which all lead to significant improvements in image quality.

Designed specifically to address consumer demand for digital still camera (DSC) quality imaging in a mobile phone, the OV2665 combines the industry's best low-light sensitivity at >1400 mV/(lux - sec) and a 2x improvement in signal-to-noise ratio (70 lux), with the industry's lowest stack height – ideal for today's ultra-slim mobile phones.

The OV2665 SoC provides automatic real time image processing with parallel (DVP) or single lane MIPI interface and supports 2 x 2 binning and sub-sampling down to any arbitrary resolution. Automatic image control features and high frame rates for video encoding deliver vivid still and video images, even in the most challenging lighting conditions.

The highly integrated OV2665 incorporates an advanced image signal processor (ISP) with features such as lens correction, auto exposure, auto white balance, and auto flicker. With two separate phase-locked loop outputs, the MIPI clock can be tuned independently of the internal clock.

No other 2 megapixel sensor delivers the image quality of the OV2665. Find out more at www.ovt.com.

OmniVision™

OV2665

Applications

- Mobile Phones
- Games and Toys
- PC Multimedia

Ordering Information

- **OV02665-A60A**
  (color, lead-free, 60-pin CSP3)

Product Features

- 1.75 µm OmniBSI technology
- industry's best low light sensitivity
- 2x improvement (over 1.75 µm FSI) in light level required to achieve 10:1 signal-to-noise ratio (< 70 lux)
- industry's lowest stack height
- ultra low power and low cost
- automatic image control functions:
  - automatic exposure control (AEC)
  - automatic white balance (AWB)
  - automatic band filter (ABF)
  - automatic 50/60 Hz luminance detection
  - automatic black level calibration (ABLC)
- programmable controls for frame rate, AEC/AGC 16-zone size/position/ weight control, mirror and flip, scaling, and windowing
- image quality controls: color saturation, hue, gamma, sharpness (edge enhancement), lens correction, defective pixel canceling, and noise canceling
- support for output formats: RAW RGB, RGB565/555, YUV422/420 and YCbCr422
- support for images sizes: UXGA, and any arbitrary size scaling down from SXGA
- support for video operations
- support for horizontal and vertical sub-sampling, binning
- support for LED and flash strobe mode
- standard serial SCCB interface
- digital video port (DVP) parallel output interface
- MIPI serial output interface
- support for second camera sharing ISP and MIPI interface
- embedded one-time programmable (OTP) memory
- on-chip phase lock loop (PLL)
- programmable I/O drive capability
- support for black sun cancellation
- built-in voltage regulator for DVDD
- suitable for module size of 6.5 x 6.5 mm

Product Specifications

- **active array size:** 1624 x 1212
- **power supply:**
  - **core:** 1.5 VDC ±5%
  - **analog:** 2.45-3.0 V
  - **I/O:** 1.7-3.0 V
- **power requirements:**
  - **active:** 250 mW
  - **standby:** 70 µA
- **temperature range:**
  - **operating:** -20° C to 70° C
  - **stable image:** 0° C to 50° C
- **output format (8-bit):**
  - YUV(422/420)
  - YCbCr422
  - RGB565/555
  - 8/10-bit RAW RGB data
- **lens size:** 1/5"
- **chief ray angle:** 25.7° non-linear
- **input clock frequency:**
  - **PLL:** 6-27 MHz
  - **PLL bypass mode:** 6-54 MHz
- **dynamic range:** 67 dB
- **maximum image transfer rate:**
  - **UXGA (1600 x 1200):** 15 fps (and any size scaling down from UXGA)
  - **SVGA (800 x 600):** 30 fps (and any size scaling down from SVGA)
- **S/N ratio:** 37 dB
- **sensitivity:** 1400 mV/(lux - sec)
- **fixed pattern noise (FPN):** 1% of $V_{PEAK-TO-PEAK}$
- **shutter:** rolling shutter
- **maximum exposure interval:** 1235 x t_{row}
- **pixel size:** 1.75 µm x 1.75 µm
- **image area:** 2820 µm x 2120 µm
- **package dimensions:**
  - **CSP3:** 4835 µm x 4945 µm

Functional Block Diagram

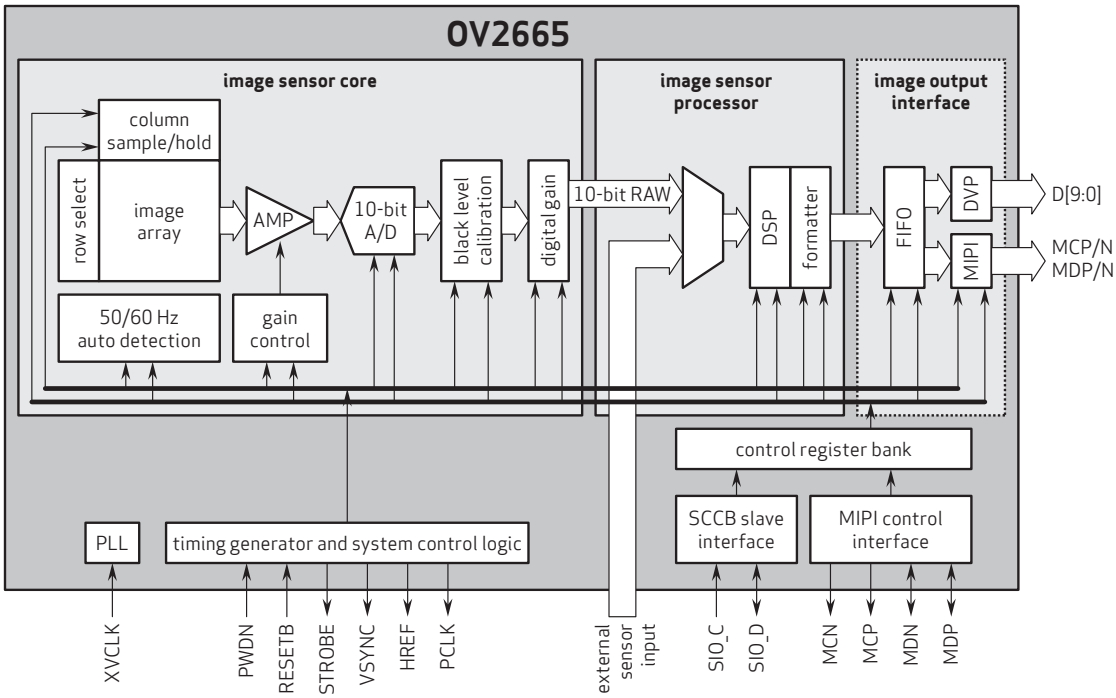

4275 Burton Drive
Santa Clara, CA 95054
USA

Tel: + 1 408 567 3000
Fax: + 1 408 567 3001
www.ovt.com

OmniVision reserves the right to make changes to their products or to discontinue any product or service without further notice. OmniVision and OmniPixel are registered trademarks of OmniVision Technologies, Inc. The OmniVision logo and OmniBSI are trademarks of OmniVision Technologies, Inc. All other trademarks are the property of their respective owners.

Version 1.0, June, 2009