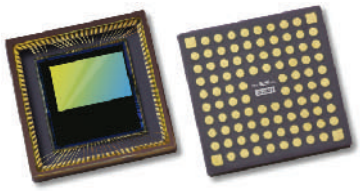

OV10633 720p wide-dynamic range (WDR) image sensor

product brief

Single Chip Wide-Dynamic Range (WDR) Solution with Embedded Image Signal Processor

lead free

available in a lead-free package

The OV10633 raises the bar in security imaging with a single-chip SOC sensor that combines 720p high-definition (HD) video with WDR in a 1/3-inch optical format. By integrating a full image processing pipeline on-chip, the OV10633 accelerates time-to-market and reduces systems' bill of materials, making it an ideal solution for mainstream surveillance applications such as IP cameras and HDcctv systems.

Implementing OmniVision's proprietary processing technology, the OV10633 delivers 115 dB dynamic range to offer clear, fully processed YUV color WDR video output. The sensor is built on a 4.2 micron OmniPixel3-HS™ pixel enabling 720p HD at unparalleled low-light sensitivity to capture detail-rich, color video in any environment, including low-light scenes or high-contrast lighting conditions.

The 1280 x 720 pixel array provides 720p HD video at 30 frames per second. It supports a digital video parallel port, and provides full-framed or windowed 10-bit or 8-bit YUV and 18-bit RAW RGB output format with complete user control over formatting and output data transfer.

The sensor offers all required automatic image control functions, including automatic exposure control, automatic white balance, automatic black level calibration, as well as defective pixel correction, gamma correction and lens shading correction. Camera functions are programmable through the serial camera control bus (SCCB) interface. Additional features include a horizontal and vertical windowing capability, external frame sync capability, 50/60 Hz flicker cancellation and low power consumption.

Find out more at www.ovt.com.

OmniVision.

OV10633

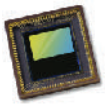

Applications

- Security and Surveillance

Product Features

- support for image sizes:
  - HD 720p (1280x720)
  - WVGA (752x480)
- support for output formats: YUV and separated and combined RAW
- low power consumption
- parallel DVP interface
- high sensitivity
- automatic exposure/gain
- horizontal and vertical windowing capability
- auto white balance control
- aperture/gamma correction
- serial camera control bus (SCCB) for register programming
- external frame sync capability
- 50/60 Hz flicker cancellation
- defective pixel correction

Ordering Information

- **OV10633-C96A-Z** (color, lead-free, 96-pin CLGA)
- **OV10133-C96A-Z** (B&W, lead-free, 96-pin CLGA)

Product Specifications

- **active array size:** 1280 x 720
- **power supply:**
  - **core:** 1.6 - 1.7V
  - **analog:** 3.14 - 3.47V
  - **I/O:** 1.7 - 3.6V
- **power requirements:**
  - **active:** 532 mW typical @ 3.3V AVDD, 1.65V DVDD, and 1.8V DOVDD
  - **standby:** 480 µW typical @ 3.3 AVDD, 1.65V DVDD, and 1.8V DOVDD
- **temperature range:**
  - **operating:** -20°C to 70°C junction temperature
  - **stable image:** 0°C to 50°C junction temperature
- **output interfaces:** 10-bit parallel DVP
- **output formats:** up to 18-bit combined raw, separated 10-bit raw, 8/10-bit YUV 422
- **lens size:** 1/3"
- **lens chief ray angle:** 9°
- **input clock frequency:** 6 - 27 MHz
- **scan mode:** progressive
- **shutter:** rolling shutter
- **maximum exposure interval:** 838 x t_{ROW}
- **maximum image transfer rate:** 30 fps full resolution
- **sensitivity:** 3650 mV/lux-sec
- **max S/N ratio:** 39 dB
- **dynamic range:** 115 dB
- **pixel size:** 4.2 µm x 4.2 µm
- **dark current:** 2.5 mV/s @ 50°C junction temperature
- **image area:** 5510.4 µm x 3418.8 µm
- **package dimensions:** 11 mm x 11 mm

Functional Block Diagram

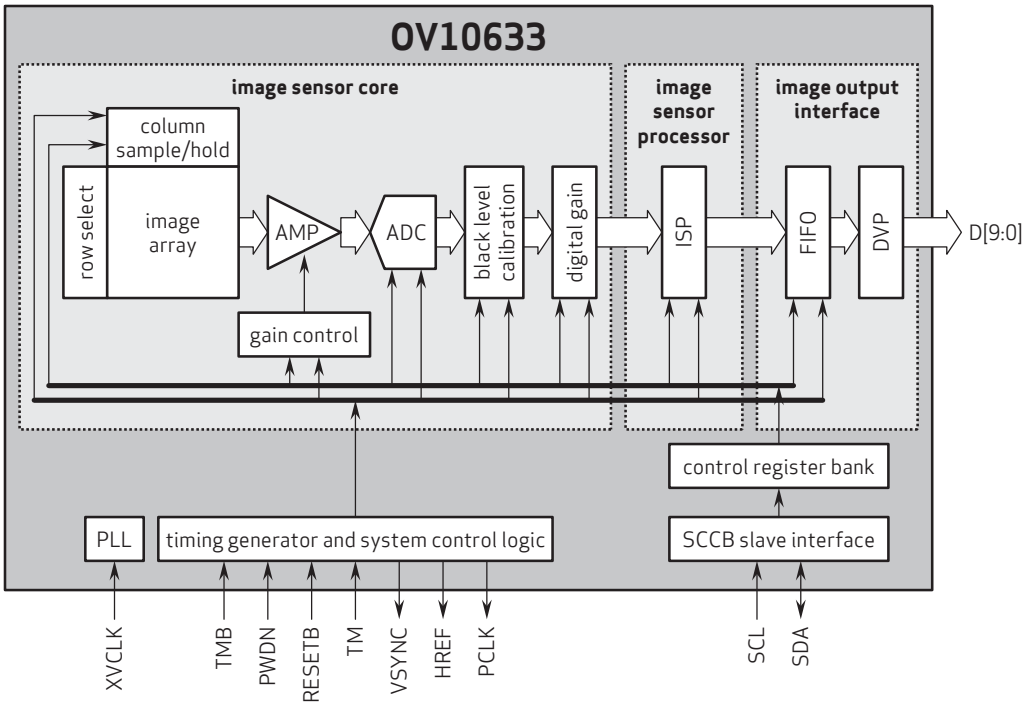

4275 Burton Drive
Santa Clara, CA 95054
USA

Tel: + 1 408 567 3000
Fax: + 1 408 567 3001
www.ovt.com

OmniVision reserves the right to make changes to their products or to discontinue any product or service without further notice. OmniVision, the OmniVision logo and OmniPixel are registered trademarks of OmniVision Technologies, Inc. OmniPixel3-HS is a trademark of OmniVision Technologies, Inc. All other trademarks are the property of their respective owners.

Version 1.4, October, 2011